Electrolux PROFESSIONAL

SkyLine Pro
Electric Combi Oven 20GN2/1

ITEM #

MODEL #

NAME #

SIS #

AIA #

217915 (ECOE202C2C0)	SkyLine Pro Combi Boilerless Oven with digital control, 20x2/1GN, electric, programmable, automatic cleaning
217925 (ECOE202C2A0)	SkyLine Pro Combi Boilerless Oven with digital control, 20x2/1GN, electric, programmable, automatic cleaning

Short Form Specification

Item No.

Combi oven with digital interface with guided selection.
- Boilerless steaming function to add and retain moisture.
- OptiFlow air distribution system to achieve maximum performance with 5 fan speed levels.
- SkyClean: Automatic and built-in self cleaning system. 5 automatic cycles (soft, medium, strong, extra strong, rinse-only).
- Cooking modes: Programs (a maximum of 100 recipes can be stored); Manual; EcoDelta cooking cycle.
- Automatic backup mode to avoid downtime.
- USB port to download HACCP data, programs and settings. Connectivity ready.
- Single sensor core temperature probe.
- Double-glass door with LED lights.
- Stainless steel construction throughout.
- Supplied with n.1 tray rack 2/1 GN, 63 mm pitch.
- Adjustable levelling feet.

APPROVAL:

Main Features

- Digital interface with LED backlight buttons with guided selection.
- Boilerless steaming function to add and retain moisture for high quality, consistent cooking results.
- Dry hot convection cycle (max 300 °C) ideal for low humidity cooking. Automatic moistener (11 settings) for boiler-less steam generation.
- EcoDelta cooking: cooking with food probe maintaining preset temperature difference between the core of the food and the cooking chamber.
- Programs mode: a maximum of 100 recipes can be stored in the oven's memory, to recreate the exact same recipe at any time. 4-step cooking programs also available.
- Fan with 5 speed levels from 300 to 1500 RPM and reverse rotation for optimal evenness. Fan stops in less than 5 seconds when door is opened.
- Single sensor core temperature probe included.
- Automatic fast cool down and pre-heat function.
- SkyClean: Automatic and built-in self cleaning system. 5 automatic cycles (soft, medium, strong, extra strong, rinse-only).
- Different chemical options available: solid (phosphate-free), liquid (requires optional accessory).
- GreaseOut: predisposed for integrated grease drain and collection for safer operation (dedicated base as optional accessory).
- USB port to download HACCP data, share cooking programs and configurations.
  USB port also allows to plug-in sous-vide probe (optional accessory).
- Back-up mode with self-diagnosis is automatically activated if a failure occurs to avoid downtime.
- Capacity: 20 GN 2/1 or 40 GN 1/1 trays.
- OptiFlow air distribution system to achieve maximum performance in chilling/heating eveness and temperature control thanks to a special design of the chamber.

Construction

- Double thermo-glazed door with open frame construction, for cool outside door panel. Swing hinged easy-release inner glass on door for easy cleaning.
- Hygienic internal chamber with all rounded corners for easy cleaning.
- 304 AISI stainless steel construction throughout.
- Front access to control board for easy service.
- IPX 5 spray water protection certification for easy cleaning.
- Supplied with n.1 trolley rack 2/1 GN, 63 mm pitch.

User Interface & Data Management

- Connectivity ready for real time access to connected appliances from remote and HACCP monitoring (requires optional accessory).
- Connectivity ready for real time access to connected appliances from remote and data monitoring (requires optional accessory – contact the Company for more details).

Sustainability

- Human centered design with 4-star certification for ergonomics and usability.
- Wing-shaped handle with ergonomic design and hands-free opening with the elbow, making managing trays simpler. Protected by registered design (EM003143551 and related family).
- Reduced power function for customized slow cooking cycles.

Included Accessories

- 1 of Trolley with tray rack 20 GN 2/1, 63mm pitch — PNC 922757

Optional Accessories

- Water softener with cartridge and flow meter (high steam usage) — PNC 920003 ❑
- Water filter with cartridge and flow meter for 6 & 10 GN 1/1 ovens (low-medium steam usage - less than 2hrs per day full steam) — PNC 920004 ❑
- Water softener with salt for ovens with automatic regeneration of resin — PNC 921305 ❑
- Pair of AISI 304 stainless steel grids, GN 1/1 — PNC 922017 ❑
- Pair of grids for whole chicken (8 per grid - 1,2kg each), GN 1/1 — PNC 922036 ❑
- AISI 304 stainless steel grid, GN 1/1 — PNC 922062 ❑
- External side spray unit (needs to be mounted outside and includes support to be mounted on the oven) — PNC 922171 ❑
- Baking tray for 5 baguettes in perforated aluminum with silicon coating, 400x600x38mm — PNC 922189 ❑
- Baking tray with 4 edges in perforated aluminum, 400x600x20mm — PNC 922190 ❑
- Baking tray with 4 edges in aluminum, 400x600x20mm — PNC 922191 ❑
- Pair of frying baskets — PNC 922239 ❑
- AISI 304 stainless steel bakery/pastry grid 400x600mm — PNC 922264 ❑
- Grid for whole chicken (8 per grid - 1,2kg each), GN 1/1 — PNC 922266 ❑
- Universal skewer rack — PNC 922326 ❑
- 6 short skewers — PNC 922328 ❑
- Volcano Smoker for lengthwise and crosswise oven — PNC 922338 ❑
- Multipurpose hook — PNC 922348 ❑
- Grease collection tray, GN 2/1, H=60 mm — PNC 922357 ❑
- Grid for whole duck (8 per grid - 1,8kg each), GN 1/1 — PNC 922362 ❑
- Thermal cover for 20 GN 2/1 oven and blast chiller freezer — PNC 922367 ❑
- Wall mounted detergent tank holder — PNC 922386 ❑
- USB single point probe — PNC 922390 ❑
- IoT module for OnE Connected and SkyDuo (one IoT board per appliance - to connect oven to blast chiller for Cook&Chill process). — PNC 922421 ❑
- External connection kit for liquid detergent and rinse aid — PNC 922618 ❑
- Dehydration tray, GN 1/1, H=20mm — PNC 922651 ❑
- Flat dehydration tray, GN 1/1 — PNC 922652 ❑
- Heat shield for 20 GN 2/1 oven — PNC 922658 ❑
- Trolley with tray rack, 15 GN 2/1, 84mm pitch — PNC 922686 ❑
- Kit to fix oven to the wall — PNC 922687 ❑
- 4 flanged feet for 20 GN , 2", 100-130mm — PNC 922707 ❑
- Mesh grilling grid, GN 1/1 — PNC 922713 ❑
- Probe holder for liquids — PNC 922714 ❑
- Levelling entry ramp for 20 GN 2/1 oven — PNC 922716 ❑
- Holder for trolley handle (when trolley is in the oven) for 20 GN oven — PNC 922743 ❑
- Tray for traditional static cooking, H=100mm — PNC 922746 ❑
- Double-face griddle, one side ribbed and one side smooth, 400x600mm — PNC 922747 ❑
- Trolley with tray rack 20 GN 2/1, 63mm pitch — PNC 922757 ❑
- Trolley with tray rack, 16 GN 2/1, 80mm pitch — PNC 922758 ❑
- Banquet trolley with rack holding 92 plates for 20 GN 2/1 oven and blast chiller freezer, 85mm pitch — PNC 922760 ❑
- Bakery/pastry trolley with rack holding 400x600mm grids for 20 GN 2/1 oven and blast chiller freezer, 80mm pitch (16 runners) — PNC 922762 ❑
- Banquet trolley with rack holding 116 plates for 20 GN 2/1 oven and blast chiller freezer, 66mm pitch — PNC 922764 ❑
- Kit compatibility for aos/easyline trolley (produced till 2019) with SkyLine/ Magistar 20 GN 2/1 combi oven — PNC 922770 ❑
- Kit compatibility for aos/easyline 20 GN oven with SkyLine/Magistar trolleys — PNC 922771 ❑
- Water inlet pressure reducer — PNC 922773 ❑
- Extension for condensation tube, 37cm — PNC 922776 ❑
- Kit for installation of electric power peak management system for 20 GN Oven — PNC 922778 ❑
- Non-stick universal pan, GN 1/ 1, H=40mm — PNC 925001 ❑
- Non-stick universal pan, GN 1/1, H=60mm — PNC 925002 ❑
- Double-face griddle, one side ribbed and one side smooth, GN 1/1 — PNC 925003 ❑
- Aluminum grill, GN 1/1 — PNC 925004 ❑
- Frying pan for 8 eggs, pancakes, hamburgers, GN 1/1 — PNC 925005 ❑
- Flat baking tray with 2 edges, GN 1/1 — PNC 925006 ❑
- Potato baker for 28 potatoes, GN 1/1 — PNC 925008 ❑

Recommended Detergents

- C25 Rinse & Descale tab 2in1 rinse aid and descaler in disposable tablets for Skyline ovens Professional 2in1 rinse aid and descaler in disposable tablets for new generation ovens with automatic washing system. Suitable for all types of water. Packaging: 1 drum of 50 30g tablets. each — PNC 0S2394 ❑

The company reserves the right to make modifications to the products without prior notice. All information correct at time of printing.

- C22 Cleaning Tab Disposable detergent tablets for SkyLine ovens Professional detergent for new generation ovens with automatic washing system. Suitable for all types of water. Packaging: 1 drum of 100 65g tablets. each PNC 0S2395 ❑

Electric

Supply voltage:	
217915 (ECOE202C2C0)	220-240 V/3 ph/50-60 Hz
217925 (ECOE202C2A0)	380-415 V/3N ph/50-60 Hz
Electrical power, default:	65.4 kW

Default power corresponds to factory test conditions. When supply voltage is declared as a range the test is performed at the average value. According to the country, the installed power may vary within the range.

Electrical power max.:	70.2 kW
Circuit breaker required	

Water:

Water inlet connections "CWI1-CWI2":	3/4"
Pressure, bar min/max:	1-6 bar
Drain "D":	50mm
Max inlet water supply temperature:	30 °C
Hardness:	5 °fH / 2.8 °dH
Chlorides:	<10 ppm
Conductivity:	>50 µS/cm

Electrolux Professional recommends the use of treated water, based on testing of specific water conditions.

Please refer to user manual for detailed water quality information.

Installation:

Clearance:	Clearance: 5 cm rear and right hand sides.
Suggested clearance for service access:	50 cm left hand side.

Capacity:

Trays type:	20 - 2/1 Gastronorm
Max load capacity:	200 kg

Key Information:

Door hinges:	
External dimensions, Width:	1162 mm
External dimensions, Depth:	1066 mm
External dimensions, Height:	1794 mm
Net weight:	330 kg
Shipping weight:	
217915 (ECOE202C2C0)	373 kg
217925 (ECOE202C2A0)	361 kg
Shipping volume:	
217915 (ECOE202C2C0)	3.26 m^3
217925 (ECOE202C2A0)	3.21 m^3

ISO Certificates

ISO Standards:	ISO 9001; ISO 14001; ISO 45001; ISO 50001

The company reserves the right to make modifications to the products without prior notice. All information correct at time of printing.

SkyLine Pro
Electric Combi Oven 20GN2/1

Front

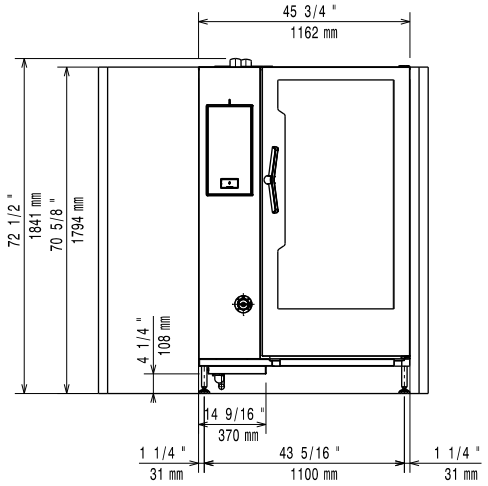

Side

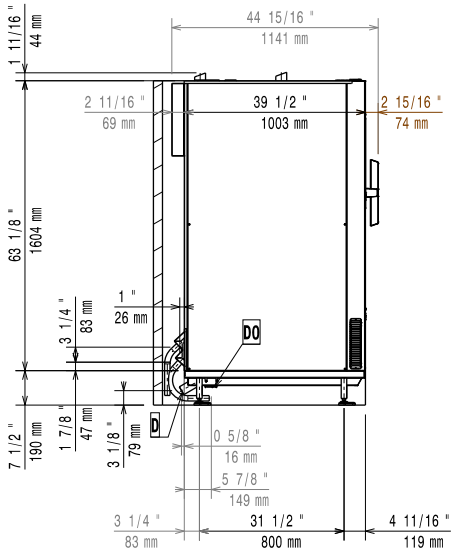

CWI1 = Cold Water inlet 1 (cleaning)
CWI2 = Cold Water Inlet 2 (steam generator)
D = Drain
DO = Overflow drain pipe
EI = Electrical inlet (power)

Top

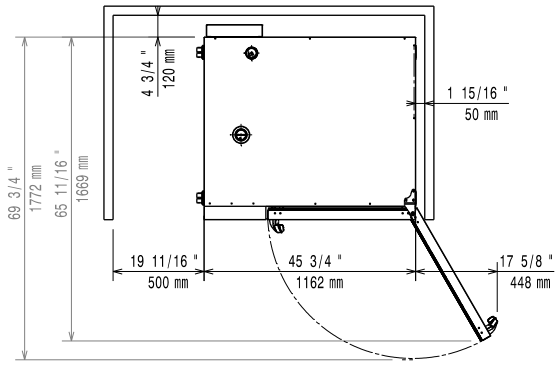

Distances

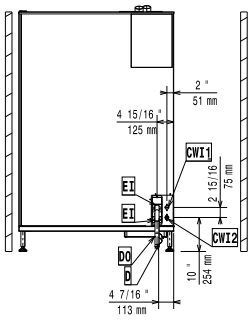

CWI1 = Cold Water inlet 1 (cleaning)
CWI2 = Cold Water Inlet 2 (steam generator)
D = Drain
DO = Overflow drain pipe
EI = Electrical inlet (power)

SkyLine Pro
Electric Combi Oven 20GN2/1

The company reserves the right to make modifications to the products without prior notice. All information correct at time of printing.

2024.10.08